EXACT SOLUTION OF EDGE-BENDING BUCKLING OF RECTANGULAR ORTHOTROPIC PLATES

Shyh-Rong Kuo[1] and J.D. Yau[2]
[1]Department of Harbor and River Engineering, National Taiwan Ocean University, Keelung, Taiwan,
e-mail: srkuo@mail.ntou.edu.tw
[2]Department of Architecture, Tamkang University, Taipei 106, Taiwan

Introduction

Orthotropic plate structures have played important applications to structural engineering for their different material properties in two mutually perpendicular directions, such as reinforced-concrete slabs for floor systems in buildings, bridge decks stiffened by width ribs, and stiffened plates in ship structures. In this paper, attention will be focused on some fundamental points concerning the formulation of virtual work equation for an edge-loaded orthotropic thin plate based on updated Lgarangian formulation. And then the buckling differential equations will be derived using the principle of virtual displacements. Of particular interest in the illustrative example is to obtain a closed form buckling solution for an orthotropic rectangular plate under two symmetrically uniform edge-moments. One feature from the expression of buckling solution indicates that the critical moment is related to both *bending* and *stretching* stiffness of the orthotropic plate.

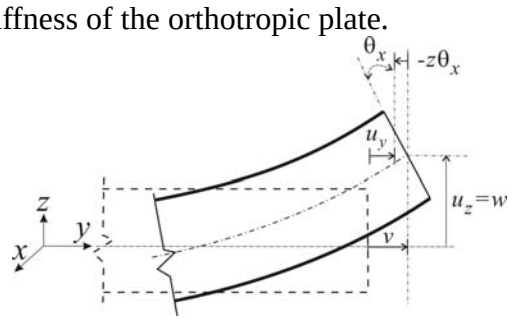

Fig. 1 Displacements of a generic point in the *y*-*z* plane;

Formulation of the Problem

By considering the assumption of Kirchhoff's thin plate theory, the displacements (u_x ,u_y, u_z) of a generic point at section (x, y) in a plate can be expressed in terms of the mid-surface displacement components (u, v, w) along the coordinate axes (x, y, z) of the plate as are expressed as

$$\begin{aligned} u_x(x,y,z) &= u + z\theta_y = u(x,y) - z(\partial w/\partial x), \\ u_y(x,y,z) &= v - z\theta_x = v(x,y) - z(\partial w/\partial y), \\ u_z(x,y,z) &= w(x,y). \end{aligned} \tag{1}$$

With the help of displacement fields of Eqs. (1) for a deformed plate, we can establish the strain-displacement relationship using the definition of Green-Lagrange strains. The ${}^1\varepsilon_{ij}$ are the type of strains to be adopted in the updated Lagrangian formulation, which can be decomposed into the linear and nonlinear parts as

$${}^1\varepsilon_{ij} = {}^1e_{ij} + {}^1\eta_{ij}. \tag{2}$$

Here, the left superscript means the current state, ${}^1e_{ij}$ = linear components of Green strain increments at C_1, ${}^1\eta_{ij}$ = nonlinear components of the strain increments, $i, j = x, y, z$, is the corresponding coordinate axis.

The constitutive equation of stress-strain relationships for an orthotropic rectangular plate are expressed as

$$\begin{Bmatrix} \sigma_{xx} \\ \sigma_{yy} \\ \sigma_{xy} \end{Bmatrix} = \begin{bmatrix} E_{xx} & E_{xy} & 0 \\ E_{xy} & E_{yy} & 0 \\ 0 & 0 & G_{xy} \end{bmatrix} \begin{Bmatrix} \varepsilon_{xx} \\ \varepsilon_{yy} \\ \varepsilon_{xy} \end{Bmatrix}, \tag{3}$$

where E_{xx} and E_{yy} are the elastic moduli along x and y directions, respectively, and G_{xy} the shear modulus. They are given as follows [1]:

$$\begin{aligned} E_{xx} &= \frac{E_1}{1-\upsilon_{12}\upsilon_{21}}, E_{yy} = \frac{E_2}{1-\upsilon_{12}\upsilon_{21}}, \\ E_{xy} &= \frac{\upsilon_{12}E_1}{1-\upsilon_{12}\upsilon_{21}}, G_{xy} = G_{12}, \upsilon_{12}E_2 = \upsilon_{21}E_1. \end{aligned} \tag{4}$$

Here, the subscript "1" means the x-coordinate, "2" the y-coordinate, and $(\upsilon_{12}, \upsilon_{21})$ = Poission ratios. Hence, E_1 and E_2 mean elastic moduli in 1– and 2– directions, respectively, and G_{12} = shear modulus.

Governing equations

Conventionally, only three components of stress, i.e., the membrane stresses $({}^1\sigma_{xx}, {}^1\sigma_{yy}, {}^1\sigma_{xy})$ in *x-y* plane along span directions, have been considered in deriving the buckling equations of thin plates using energy approaches. Based on the updated Lagrangian formulation the virtual work equation of equilibrium for a structure in a fully nonlinear incremental form can be written as [2]

$$\delta U + \delta V = {}^2_1R - {}^1_1R \tag{5}$$

where δU = virtual strain energy due to elastic deformations, δV = potential energy due to initial stresses, and ${}^2_1R$ and ${}^1_1R$ denote respectively the virtual work done by the external loads acting on the structure at current stage C_2 and last state C_1.

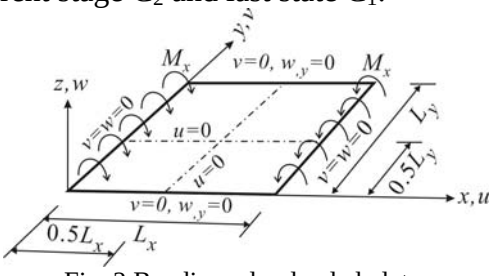

Fig. 2 Bending edge-loaded plate.

Consider the bending edge-loaded plate shown in Fig. 2, the virtual work equation of this plate structure is

$$\begin{aligned}
&\iint_A \begin{pmatrix} D_{11}w_{,xx}\delta w_{,xx} + D_{12}\delta(w_{,xx}w_{,yy}) \\ +D_{22}w_{,yy}\delta w_{,yy} + 4D_{66}w_{,xy}\delta w_{,xy} \end{pmatrix} dA \\
&+\iint_A \begin{pmatrix} A_{11}u_{,x}\delta u_{,x} + A_{12}\delta(u_{,x}v_{,y}) + A_{22}v_{,y}\delta v_{,y} \\ +A_{66}(u_{,y}+v_{,x})\delta(u_{,y}+v_{,x}) \end{pmatrix} dA \\
&+\iint_A \left[{}^1M_{xx}\delta(u_{,xx}w_{,x} + v_{,xx}w_{,y})\right] dA \\
&= \oint_{{}^2\Gamma} {}^2M_n\delta\theta_s d\,{}^2s - \oint_{{}^1\Gamma} {}^1M_n\delta\theta_s d\,{}^1s \\
&+\oint_{{}^1\Gamma}\left[{}^1M_n\delta(u_{,n}w_{,x} + v_{,n}w_{,y})\right] d\,{}^1s - \oint_{{}^1\Gamma} {}^1M_n\theta_z^*\delta\theta_n d\,{}^1s
\end{aligned} \tag{6}$$

Here, of particular interest in this study is to take all the six components of stress into account in formulating the potential energy for a bending edge-loaded orthotropic plate. By invoking the conditions of stress equilibrium for the plate and Green's theorem to relate the potential energy to external virtual works, all the potential energy associated with the non-conventional stresses $({}^1\sigma_{xz}, {}^1\sigma_{yz}, {}^1\sigma_{zz})$ can either *cancel* those terms conventionally referred to as higher-order terms or *combine* with them to yield some new but meaningful terms. By variational principle, the governing equations are given as follows:

$$\begin{aligned}
&A_{11}u_{,xx} + A_{66}u_{,yy} + (A_{12}+A_{66})v_{,xy} - M_x w_{,xxx} = 0 \\
&A_{22}v_{,yy} + A_{66}v_{,xx} + (A_{12}+A_{66})u_{,xy} - M_x w_{,xxy} = 0 \\
&D_{11}w_{,xxxx} + 2(D_{12}+2D_{66})w_{,xxyy} \\
&+D_{22}w_{,yyyy} - M_x(u_{,xxx} + v_{,xxy}) = 0
\end{aligned} \tag{7}$$

Solving the eigen-value problem of Eq. (7) with the boundary conditions shown in Fig. 2, one can derive the following buckling equation

$$\begin{aligned}
&\left[D_{11}\lambda_{ij}^4 + D_{22} + 4D_{66}\lambda_{ij}^2\right]\left[(A_{11}\lambda_{ij}^4 + A_{22})A_{66} + A_{11}A_{22}\lambda_{ij}^2\right] \\
&-\lambda_{ij}^4\left[(A_{11}+A_{22})\lambda_{ij}^2 + A_{66}(\lambda_{ij}^2 - 1)^2\right]M_x^2 = 0,
\end{aligned}$$

where $\lambda_{ij} = \chi_i / \kappa_j = iL_y / jL_x$. The critical loads obtained from the characteristic equation can be used as benchmark solutions of finite element methods.

Conclusion

In this paper, the governing equations of edge-bending orthotropic plate were derived using updated Lagrangian formulation that the instability effect of all kind of membrane and bending actions has been taken into account. The characteristic equation of an orthotropic rectangular plate under two opposite edge-moments can be used as a benchmark solution in calibrating the predicted results by numerical methods.

Acknowledgements

The research reported herein was sponsored in part by grant Nos. NSC 99-2221-E-019-016 and NSC 99-2221-E-032-020-MY3 of National Science Council, Taiwan.

References

1. Bloom, F., Coffin, D., 2001, Handbook of thin plate buckling and postbuckling, Chapman & Hall/CRC, Boca Raton, Florida.
2. Yang, Y.B., Kuo, S.R., 1994, Theory & Analysis of Nonlinear Framed Structures, Prentice Hall, Singapore.